XY2CZ918

www.tesensors.com

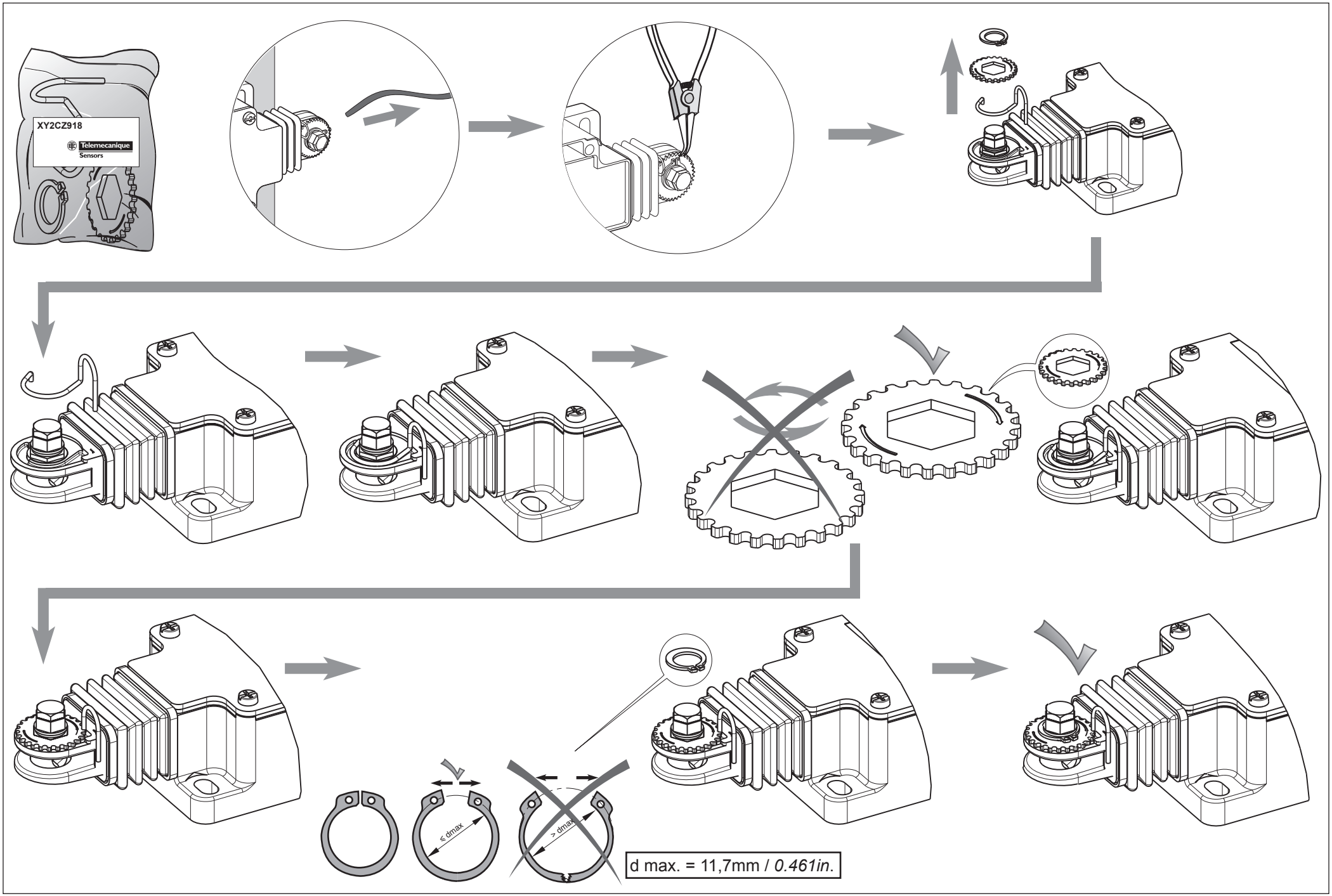

Printed in

Telemecanique
Sensors