XVR Z081

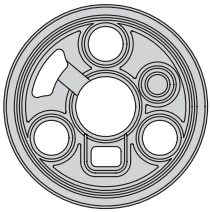

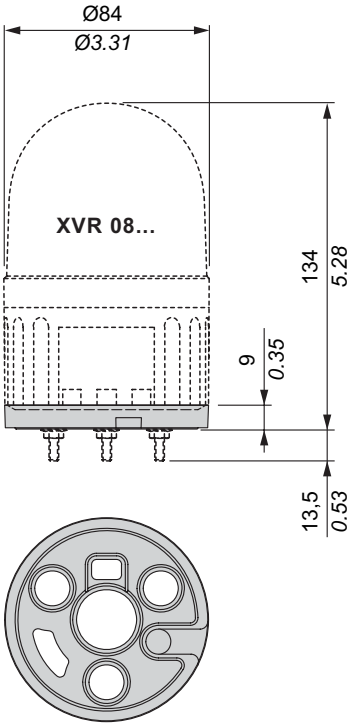
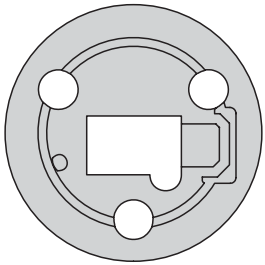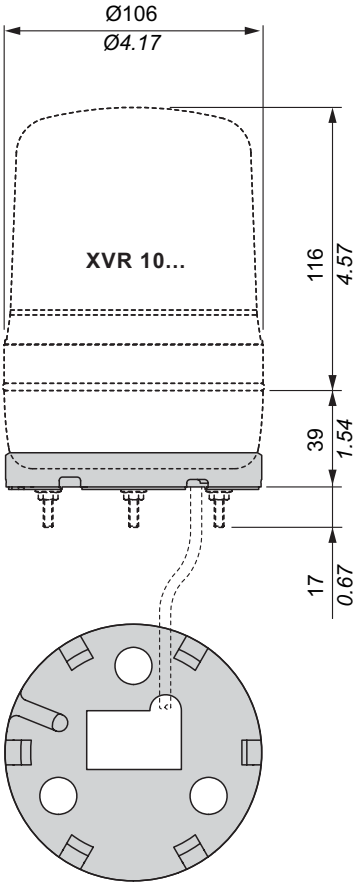
XVR Z082