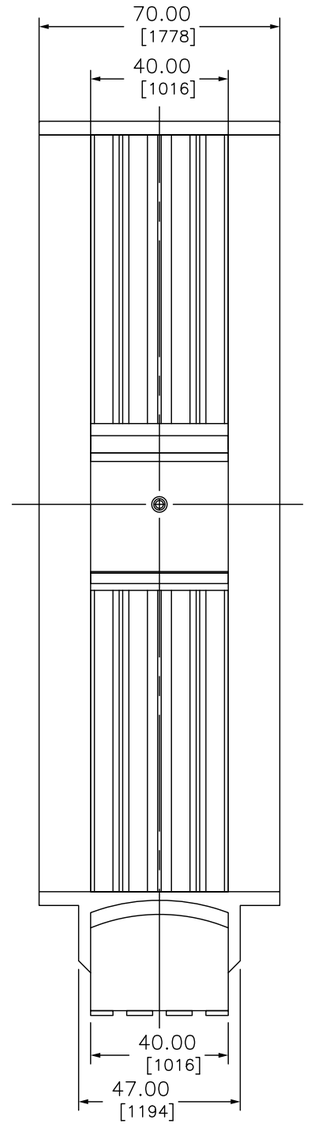

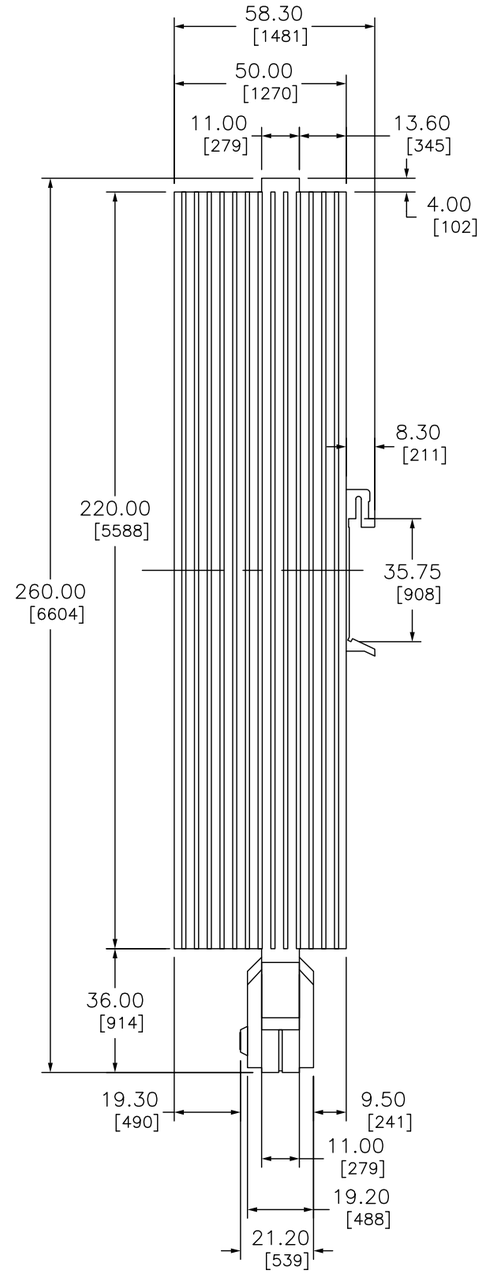

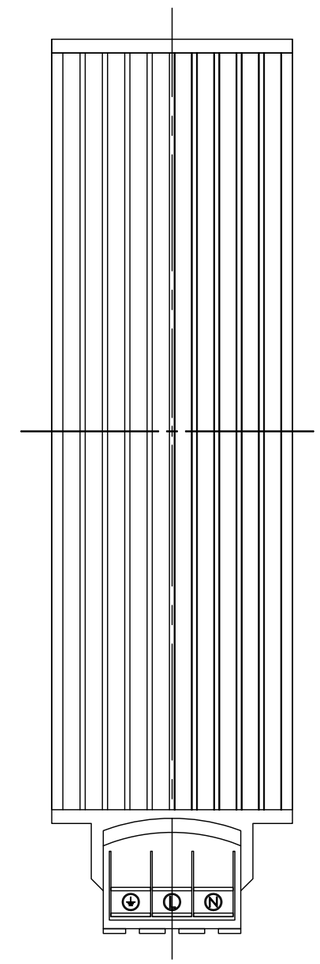

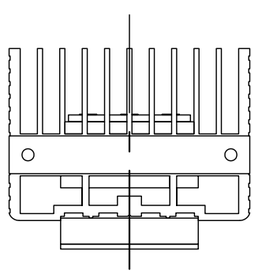

REFERENCE
NSYCR150WU1
NSYCR150WU2
NSYCR150WU3

DUAL DIMENSIONS: INCHES
MILLIMETERS

CLIMASYS CR

Schneider Electric

DWG# NO. NSYCR150WU2C