Product data sheet
Characteristics

HMIDM6421
Flat screen, Harmony Modular iPC, Display PC 4:3 12" single touch for HMIBM

Main

Range of Product	Harmony iPC
Product or Component Type	Flat screen
Terminal type	Touchscreen display
Device mounting	Flush
Product Compatibility	Modular Box PC

Complementary

View angle horizontal x vertical	140 x 115°
Contrast Ratio	500:1
Touchscreen resolution	2048 x 2048
Display resolution	1024 x 768 pixels XGA
Display size	12.1 inch
Aspect ratio	4:3
Display type	LED Colour TFT LCD
Display colour	16777216 colors
Luminance	27.87 fc (300 cd/m²)
Backlight lifespan	50000 hours 77 °F (25 °C)
Touch panel	Single touch analogue resistive
Integrated connection type	USB 2.0 type A
Function Available	Operate with water on screen
[Us] rated supply voltage	24 V DC power supply 100...240 V AC power supply
Supply voltage limits	18…36 V
Inrush current	8.9 A
Power consumption in W	57.87 W Box PC HMIBMP) 52.87 W Box PC HMIBMU)
Local signalling	Status LED
Depth	Enclosure 2.61 in (66.3 mm) 0.28 in (7 mm)
Height	9.65 in (245.1 mm)
Width	12.56 in (319.1 mm)
Net Weight	5.07 lb(US) (2.3 kg)

The information provided in this documentation contains general descriptions and/or technical characteristics of the performance of the products contained herein.
This documentation is not intended as a substitute for and is not to be used for determining suitability or reliability of these products for specific user applications.
It is the duty of any such user or integrator to perform the appropriate and complete risk analysis, evaluation and testing of the products with respect to the relevant specific application or use thereof.
Neither Schneider Electric Industries SAS nor any of its affiliates or subsidiaries shall be responsible or liable for misuse of the information contained herein.

Environment

Standards	Class I division 2 CSA C22.2 No 213 CSA C22.2 No 142 UL 6110-2-201 Class I division 2 ANSI/ISA 12-12-01
Product certifications	CE C-tick IEC-Ex EAC
IP degree of protection	IP66
NEMA degree of protection	NEMA 4X
Pollution degree	2
Ambient air temperature for storage	-22…158 °F (-30…70 °C)
Relative Humidity	10…95 % non-condensing
Ambient air temperature for operation	32…131 °F (0…55 °C)
Operating altitude	6561.68 ft (2000 m)
Vibration resistance	1 gn 5…500 Hz) HDD 2 gn 5…500 Hz) SSD 2 gn 5…500 Hz) Cfast card

Ordering and shipping details

Category	22574-MAGELIS BOX PC AND PANEL PC
Discount Schedule	MC2
GTIN	3606481245533
Returnability	No

Packing Units

Unit Type of Package 1	PCE
Number of Units in Package 1	1
Package 1 Height	18.70 in (47.5 cm)
Package 1 Width	10.04 in (25.5 cm)
Package 1 Length	17.72 in (45 cm)
Package 1 Weight	9.77 lb(US) (4.432 kg)
Unit Type of Package 2	CAR
Number of Units in Package 2	1
Package 2 Height	17.72 in (45 cm)
Package 2 Width	9.65 in (24.5 cm)
Package 2 Length	16.93 in (43 cm)
Package 2 Weight	9.48 lb(US) (4.3 kg)
Unit Type of Package 3	P12
Number of Units in Package 3	6
Package 3 Height	25.20 in (64 cm)
Package 3 Width	31.50 in (80 cm)
Package 3 Length	47.24 in (120 cm)
Package 3 Weight	58.63 lb(US) (26.592 kg)

Offer Sustainability

California proposition 65	WARNING: This product can expose you to chemicals including: Lead and lead compounds, which is known to the State of California to cause cancer and birth defects or other reproductive harm. For more information go to www.P65Warnings.ca.gov
REACh Regulation	REACh Declaration
REACh free of SVHC	Yes
EU RoHS Directive	Pro-active compliance (Product out of EU RoHS legal scope) EU RoHS Declaration
Mercury free	Yes

China RoHS Regulation	China RoHS Declaration
RoHS exemption information	Yes
WEEE	The product must be disposed on European Union markets following specific waste collection and never end up in rubbish bins.

HMIDM6421

Display Dimensions

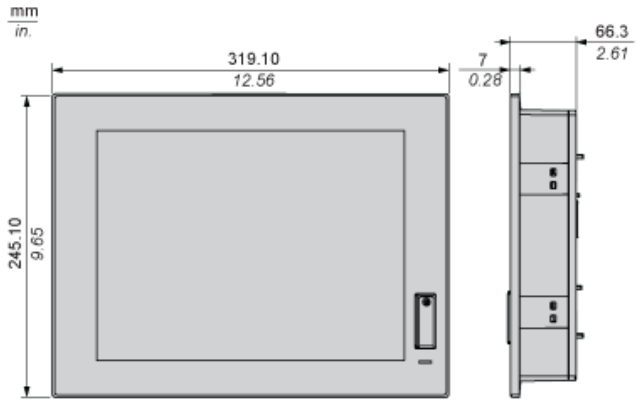

Spacing requirements - Mounted with Display adaptor HMIDAD

In order to provide sufficient air circulation, mount the Display Adapter so that the spacing above, below and on the sides of the unit is as follows:

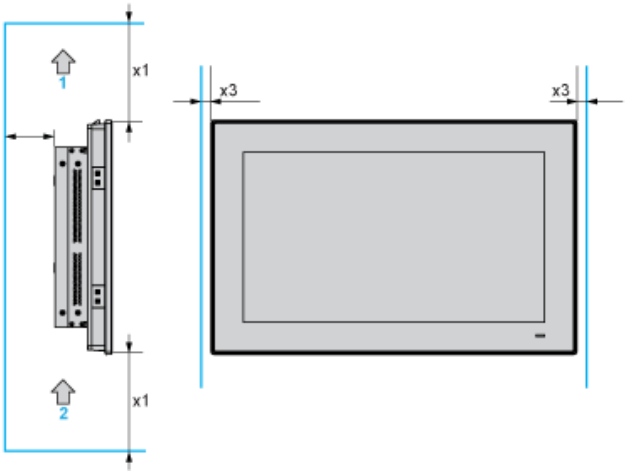

1 : Air out
2 : Air in
x1 > 100 mm (3.93 in)
x2 > 50 mm (1.96 in)
x3 > 15 mm (0.59 in)

Spacing Requirements - Mounted with Modular Box PC HMIBM

In order to provide sufficient air circulation, mount the display so that the spacing above, below and on the sides of the unit is as follows:

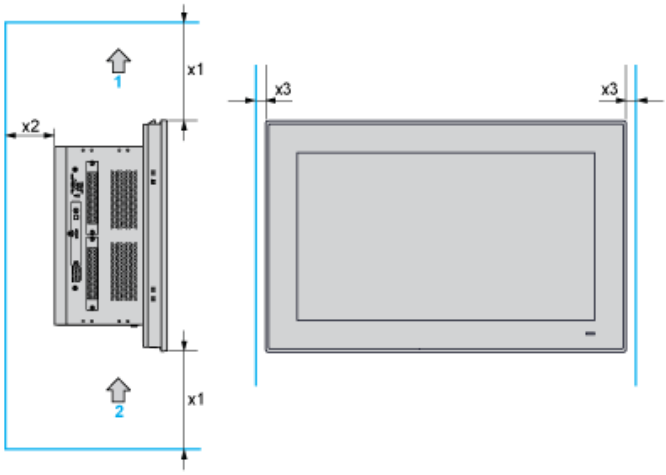

1 : Air out
2 : Air in
x1 > 100 mm (3.93 in)
x2 > 50 mm (1.96 in)
x3 > 15 mm (0.59 in)

Mounting Orientation

The following figure shows the allowed mounting orientation for the display:

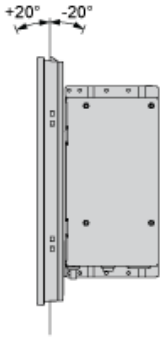

Panel Cut Dimensions

For cabinet installation, you need to cut the correctly sized opening in the installation panel according to the model of display.

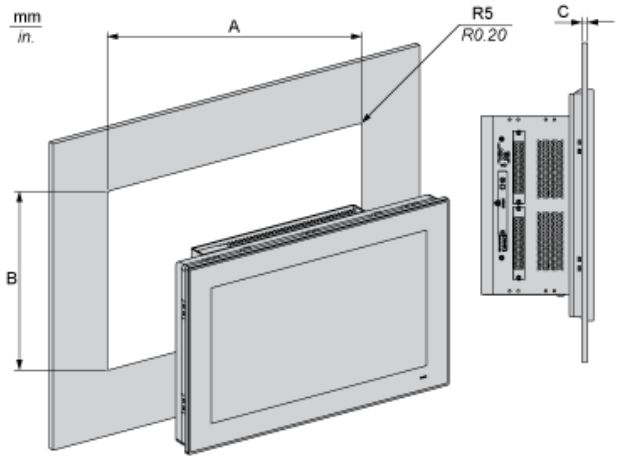

A		B		C		R	
mm	in.	mm	in.	mm	in.	mm	in.
301.5	11.87	227.5	8.85	2...4	0.08...0.16	5	0.20